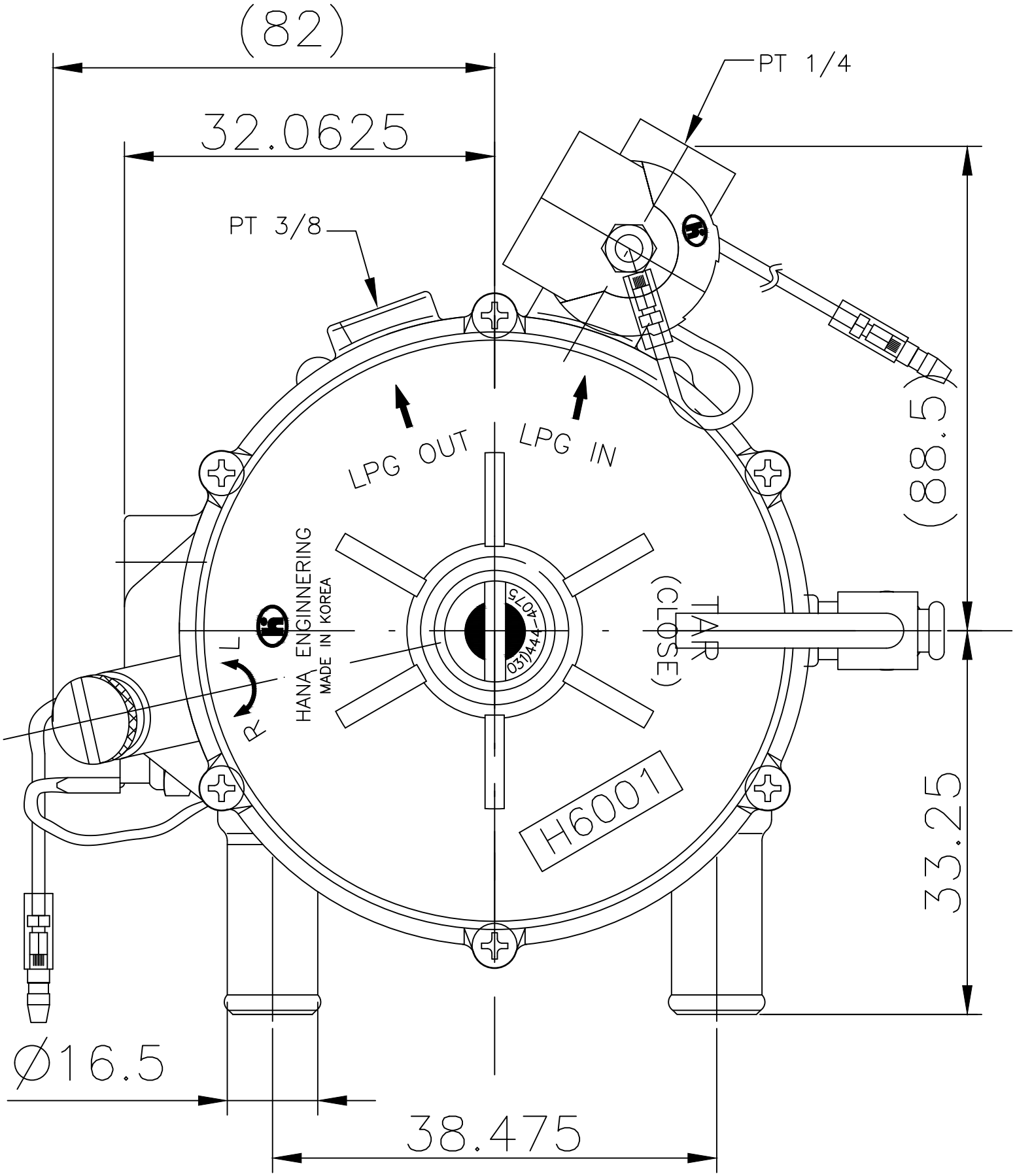
(82)
32.0625
PT 1/4
PT 3/8
LPG OUT
LPG IN
(88.5)
HANA ENGINNERING
MADE IN KOREA
L
R
TAP
(CLOSE)
H6001
33.25
Ø16.5
38.475