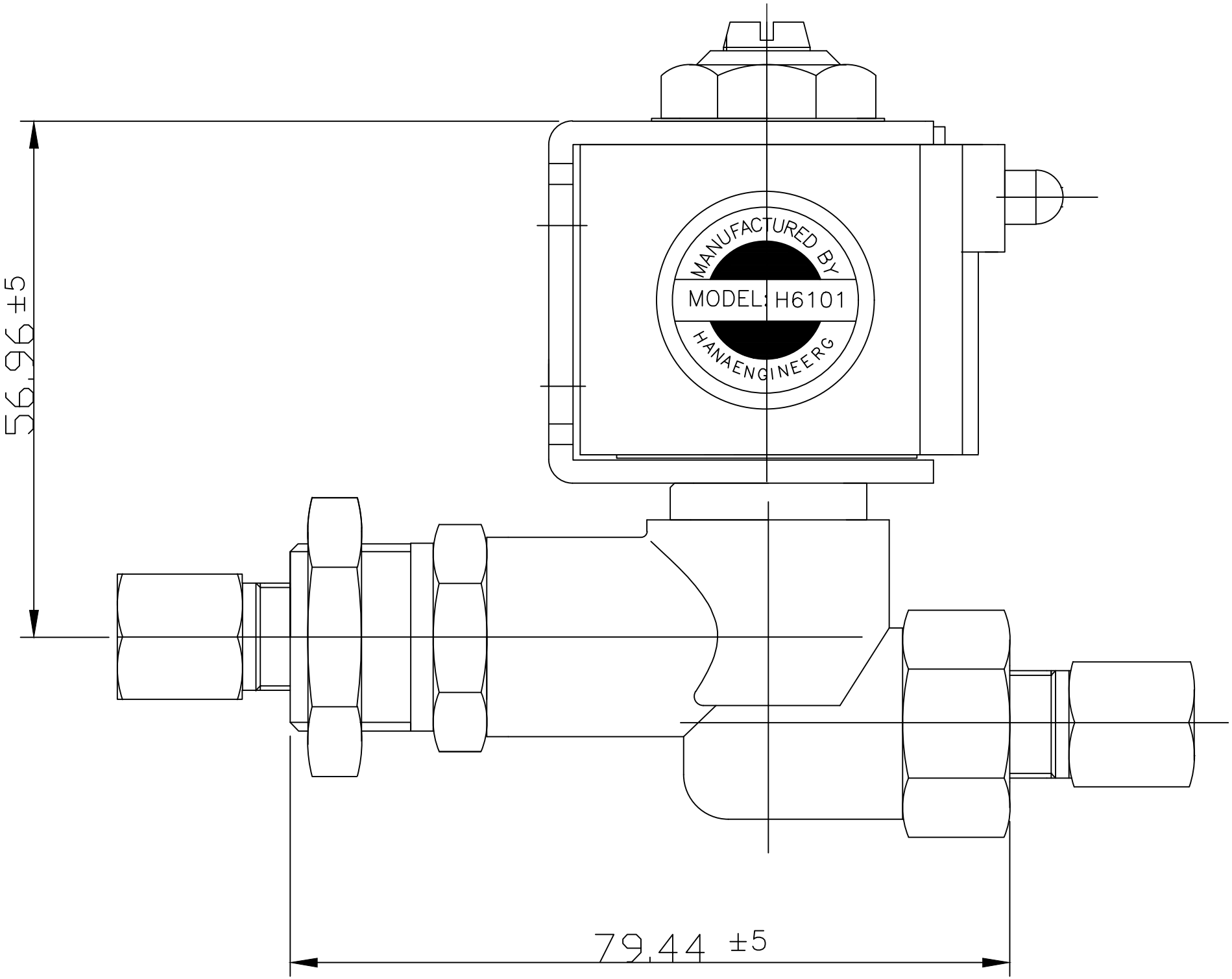
56.96 ±5
MANUFACTURED BY
MODEL: H6101
HANAENGINEERG
79.44 ±5